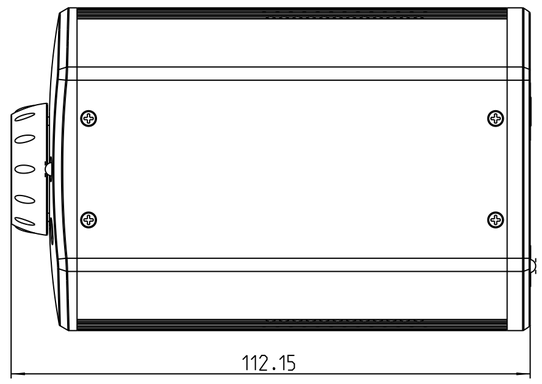
112.15

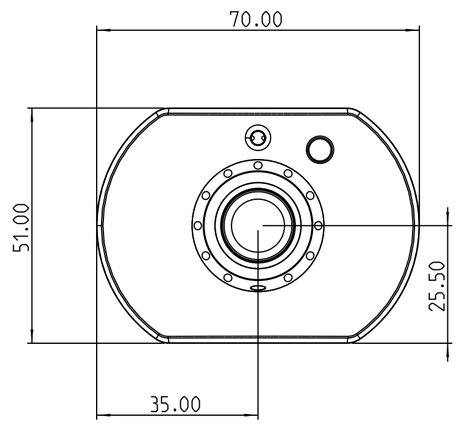
70.00
51.00
25.50
35.00

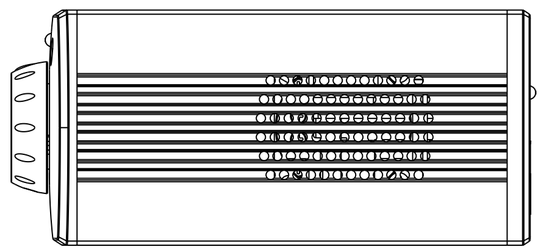

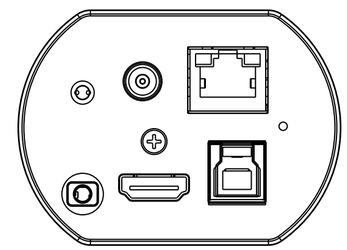

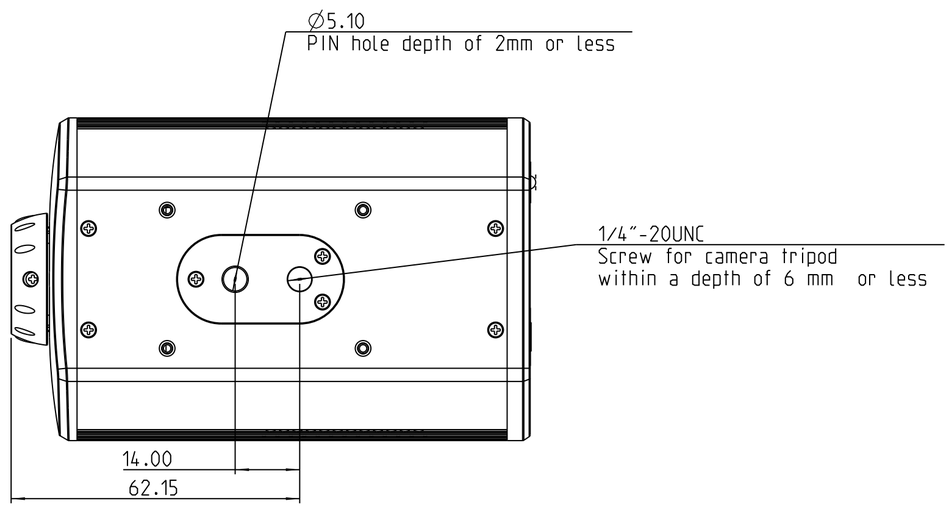
∅5.10
PIN hole depth of 2mm or less
1/4"-20UNC
Screw for camera tripod
within a depth of 6 mm or less
14.00
62.15